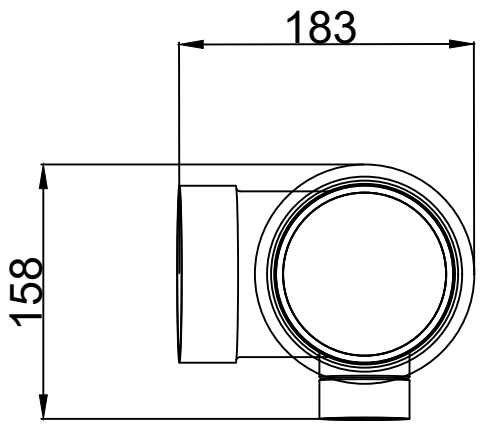

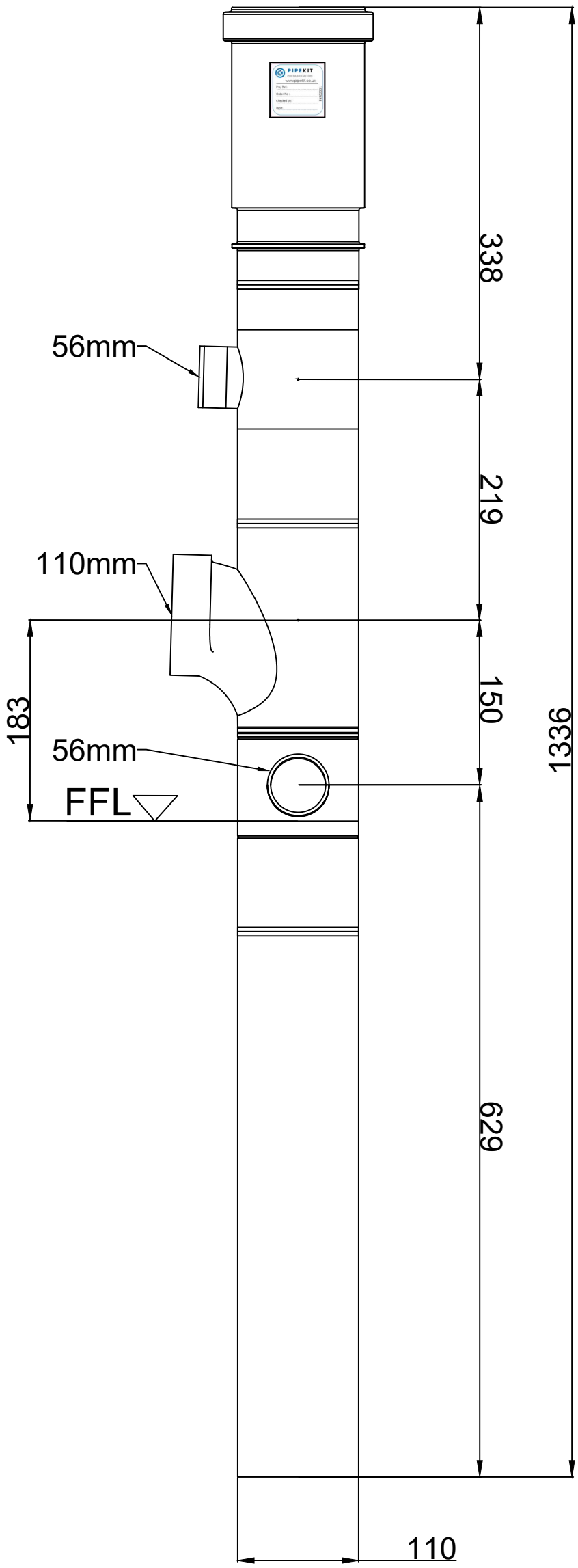

PIPEKIT

Head Office: Pipekit Ltd, Abella House, Longden Road, Shrewsbury, Shropshire, SY3 9PS
Phone: **01743 860088**· Email: **enquiries@pipekit.co.uk**

Made using component parts which conform to ISO 9001 and are manufactured to BBA 92/2796. Pre-defined quality control checks as specified on the finalised drawings are carried out and documented for each fabrication.
Fabrications are made and tested within the tolerances stated on the finalised drawings. By the nature of plastics and the tolerance within connecting products or building infrastructure there may be a need to undertake slight remedial adjustments on site during installation.
As the fabrications have been made to meet specific drawing requirements and within tolerance, Pipekit Ltd are therefore not liable for any costs incurred with regards to remedial work carried out.

- Air test per BS EN 12056-2:2000
- Overall dimension check (10mm tolerance)
- Critical dimensions check (5mm tolerance)
- Weld integrity check
- Alignment check
- Data label put on prefab

Material - HDPE

Description:- Stack type 03
Bathroom/shower room
left handed

Order Ref:- PKF-100.03

DO NOT SCALE FROM THIS DRAWING

DIMENSIONS IN MM
UNLESS STATE
OTHERWISE. NTS @ A3